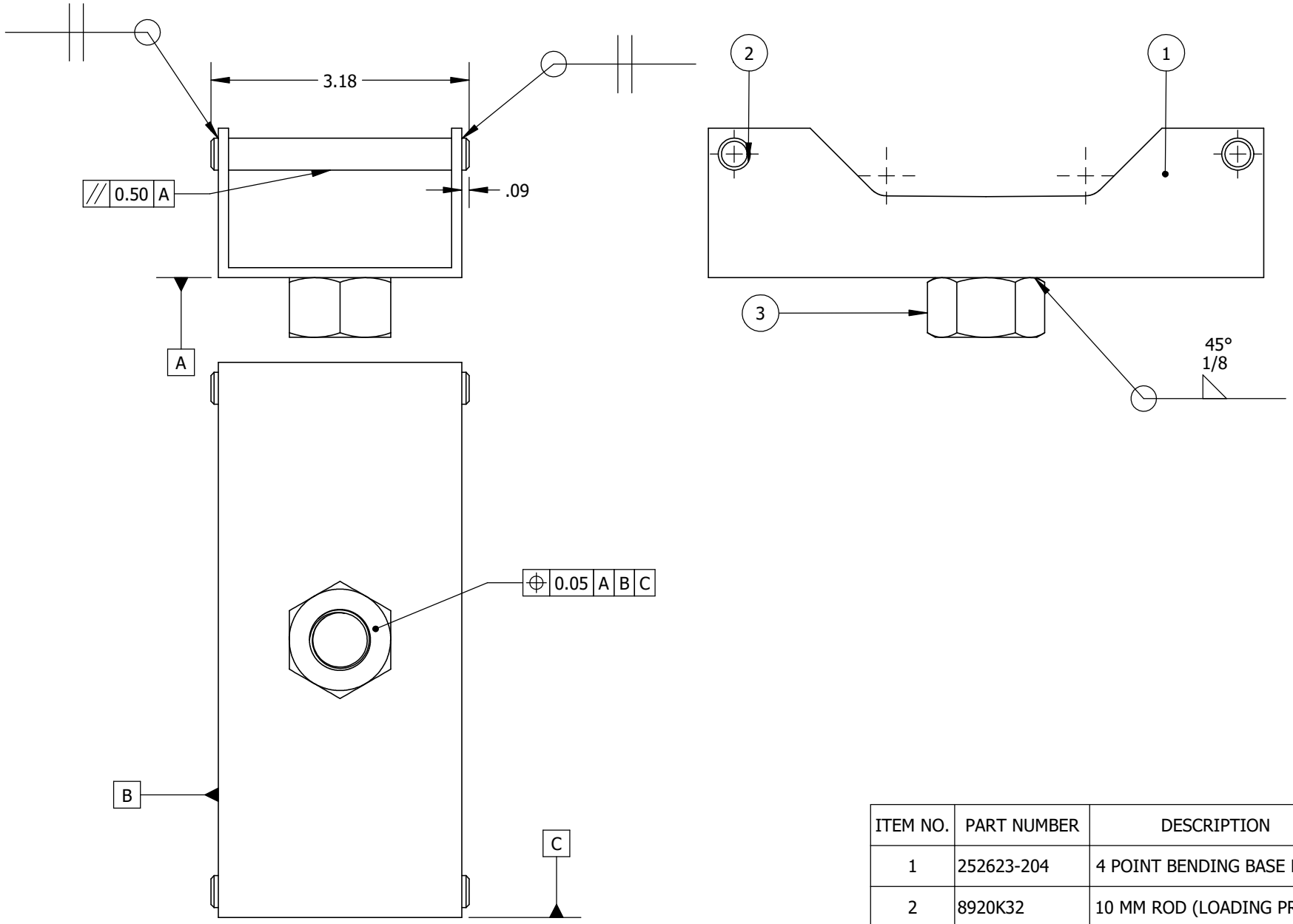

ITEM NO.	PART NUMBER	DESCRIPTION	QTY.
1	252623-204	4 POINT BENDING BASE BODY	1
2	8920K32	10 MM ROD (LOADING PROBE)	2
3	91849A665	3/4-16 UNF 2B HEX NUT	1

UNIVERSITÉ Concordia UNIVERSITY

PROPRIETARY INFORMATION NOT TO BE RELEASED WITHOUT WRITTEN AUTHORIZATION FROM CONCORDIA UNIVERSITY

MATERIAL: 2.000X3.000 SQUARE TUBING - STEEL 1018

FINISH: AS MACHINED

DESIGNER: L.FERRAZZA

DRAFTER: L.FERRAZZA

PRIMARY DIMENSIONS: INCHES
UNLESS OTHERWISE SPECIFIED

APPROVED: F. LASTNAME

UNLESS OTHERWISE SPECIFIED

SURFACE ROUGHNESS: √N/A

TOLERANCES: X ± 1
.X ± .1
.XX ± .01
.XXX ± .005
ANGLE ± .5°

SCALE: 1:1.75

SHEET: 1/1

TITLE: 4 POINT BENDING BASE BODY ASSEMBLY

SIZE: A

DATE: 2025-11-10

PROJECT: MECH 490

DWG. NUMBER: 252623-205

REV: 4

SOLIDWORKS Educational Product. For Instructional Use Only.